IDF15
INTEL DEVELOPER FORUM

# Thunderbolt™ 3 Technology and USB-C

Jeff Bake – Thunderbolt Product Manager, Intel Corporation
Dinesh Jain – Senior Product Engineer, Intel Corporation
Jacob Ontiveros – Senior Applications Engineer, Texas Instruments

**HSTS004**

intel
experience what's inside™

# Agenda

- USB-C Introduction
- Thunderbolt™ 3 Technology Overview
- Key User Experiences
- Thunderbolt Device Development
- USB-C Alternate Mode and Power Delivery
- Summary

# Agenda

- USB-C Introduction
- Thunderbolt™ 3 Technology Overview
- Key User Experiences
- Thunderbolt Device Development
- USB-C Alternate Mode and Power Delivery
- Summary

# USB-C Cables and Connectors

- Symmetric and Flip-able/Reversible
- Power delivery up to 100W of power - 20V at 5A
- Supports Alternate Modes – DisplayPort*, Thunderbolt™, Audio etc.

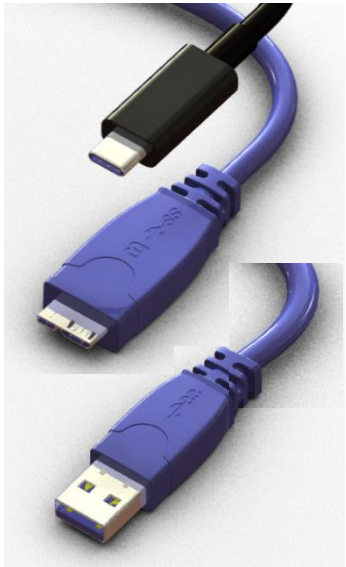


Thunderbolt 3 is bringing Thunderbolt to USB-C

# More Speed

- **40Gbps** Thunderbolt™ 3
  - Bi-directional, PCI Express® and DisplayPort*
  - Four lanes of PCI Express **Gen 3**
  - Eight lanes of DisplayPort 1.2
- Native **USB 3.1** (10Gbps)
- Native DisplayPort 1.2

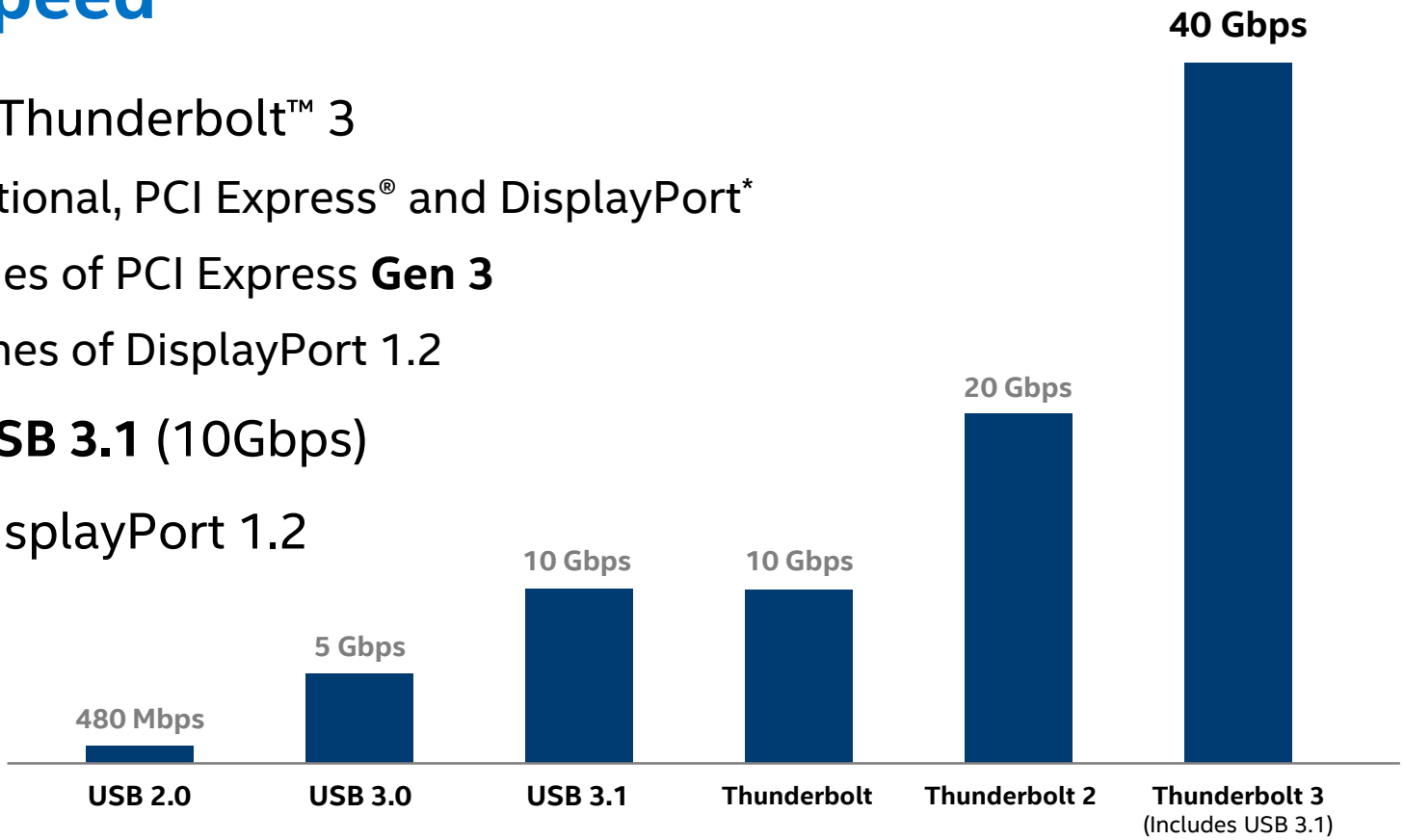

# Thunderbolt™ 3 Brings Thunderbolt to USB-C

The USB-C that does it all.

More **Protocols**

More **Speed**

**40 Gbps –** fastest connection

More **Pixels**

**Dual 4K displays**
60hz

More **Power**

**100W** charging

**15W** device

# Not all USB-C Computer Ports Will be Equal

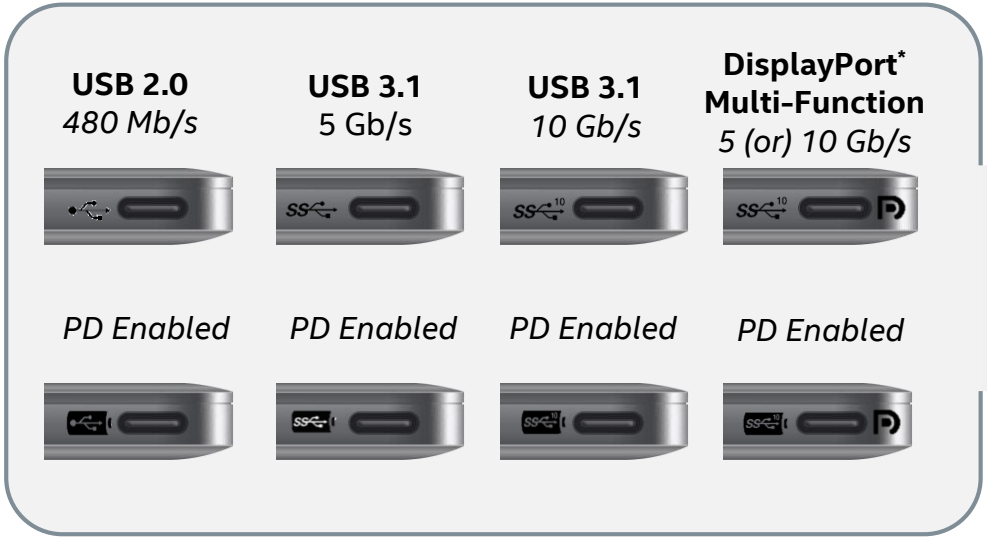


THUNDERBOLT™

***40 Gb/s and PD Enabled***

Thunderbolt™ 3 the USB-C that does it all

# Agenda

- USB-C Introduction
- Thunderbolt™ 3 Technology Overview
- Key User Experiences
- Thunderbolt Device Development
- USB-C Alternate Mode and Power Delivery
- Summary

# More Protocols

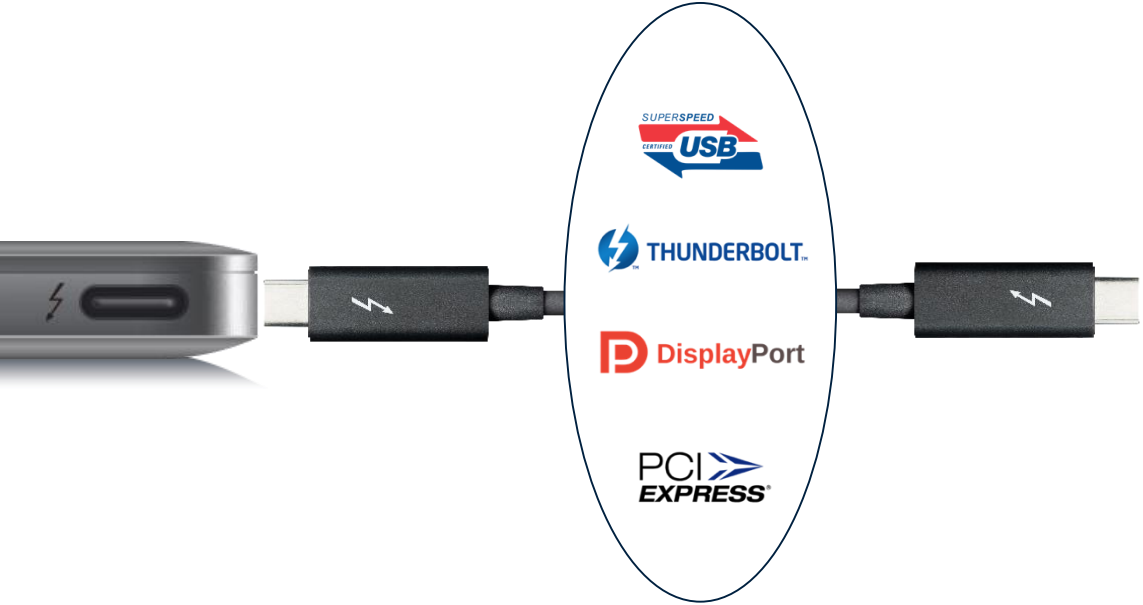



**More protocols** than any other I/O controller

**Connect *any* dock, device or display,** including billions of USB devices

# Thunderbolt™ 3 - Host Mode

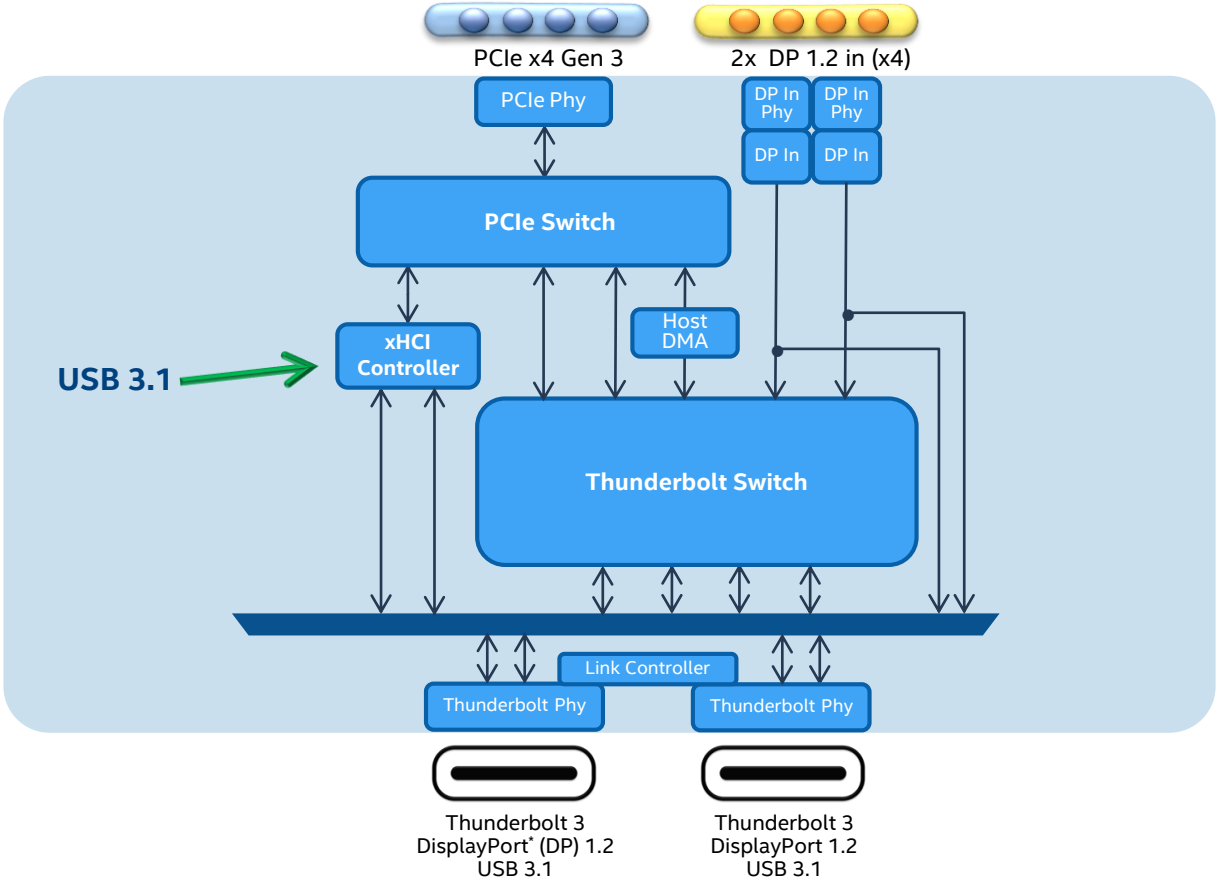


- Connected through PCI Express® (PCIe) switch to Host PCIe bus
- Always functions as a Host USB controller
  - Appears in host Device Manager even if located in a dock or device

# Thunderbolt™ 3 – Thunderbolt Host Mode

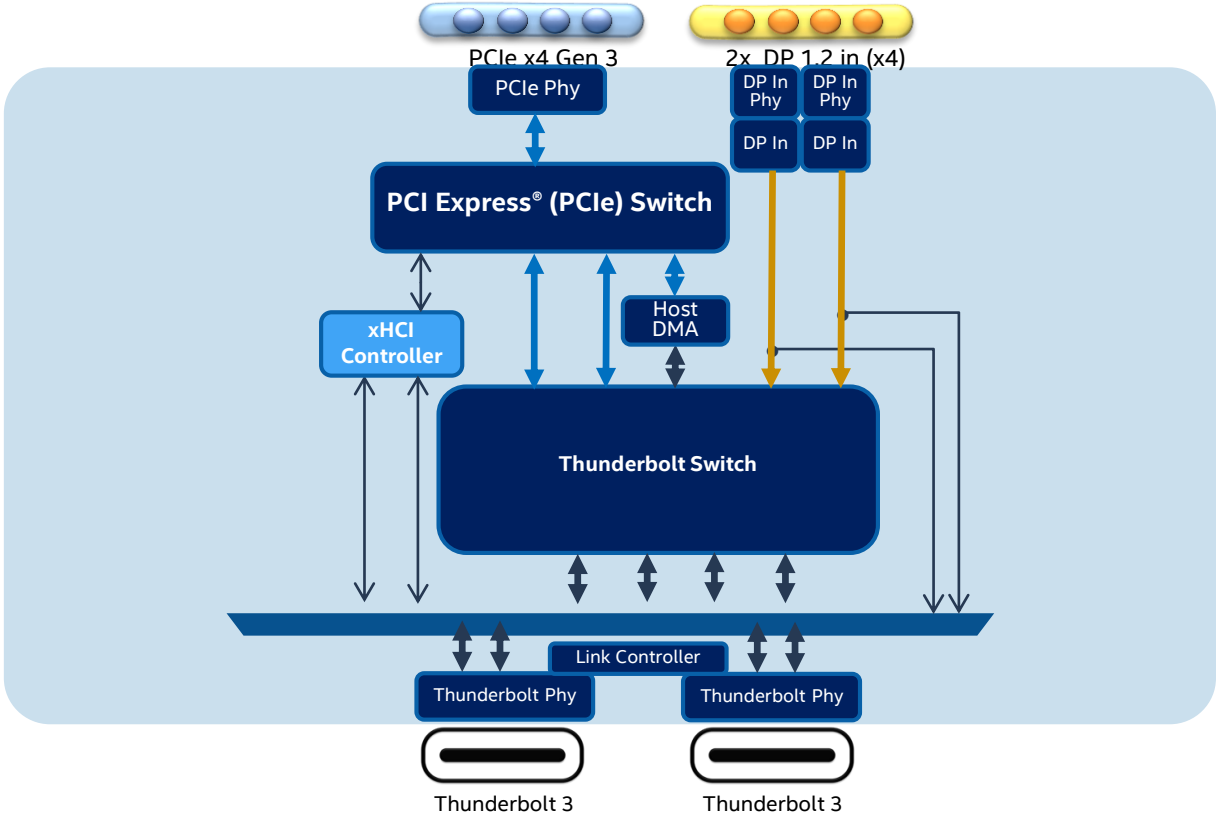


Active Block

Inactive Block

Active Path

Inactive Path

# Thunderbolt™ 3 – USB 3.1 Host Mode

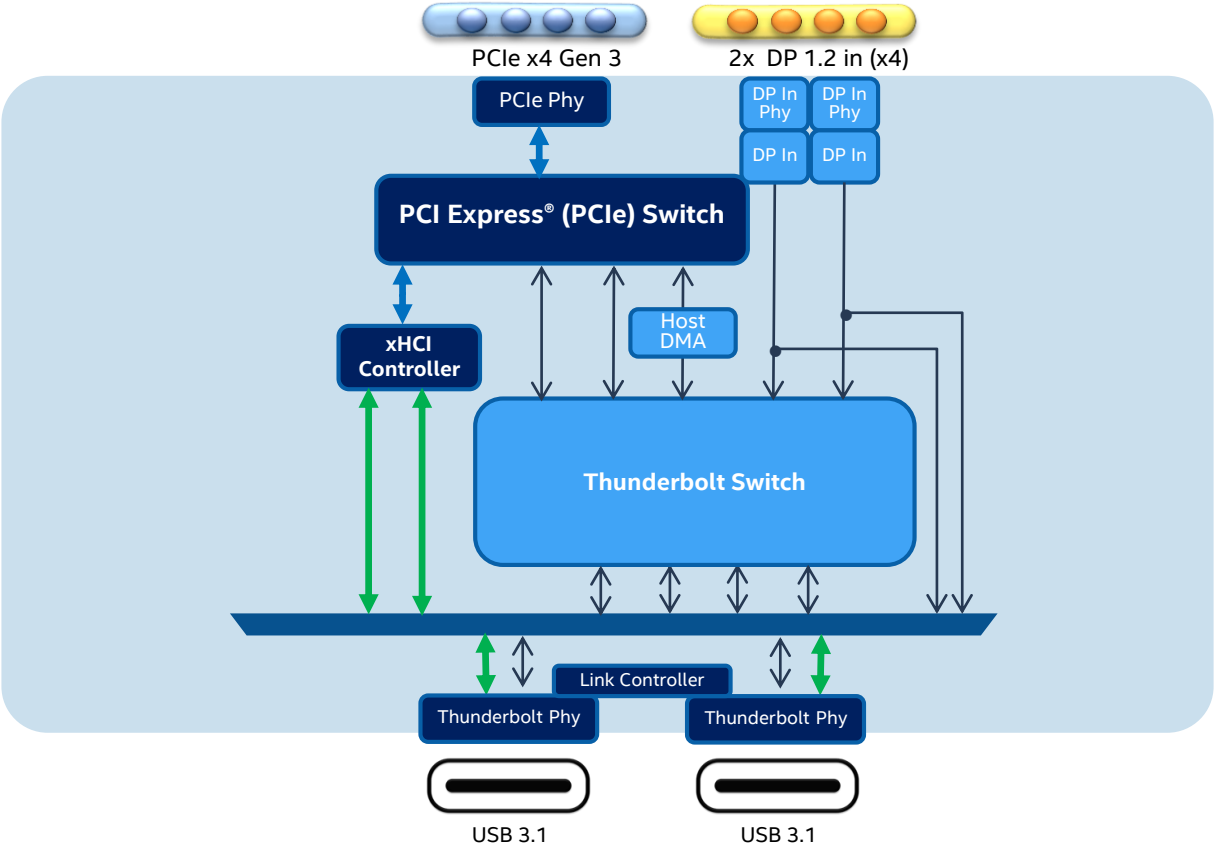


Active Block

Inactive Block

Active Path

Inactive Path

# Thunderbolt™ 3 – Thunderbolt/USB 3.1 Host Mode

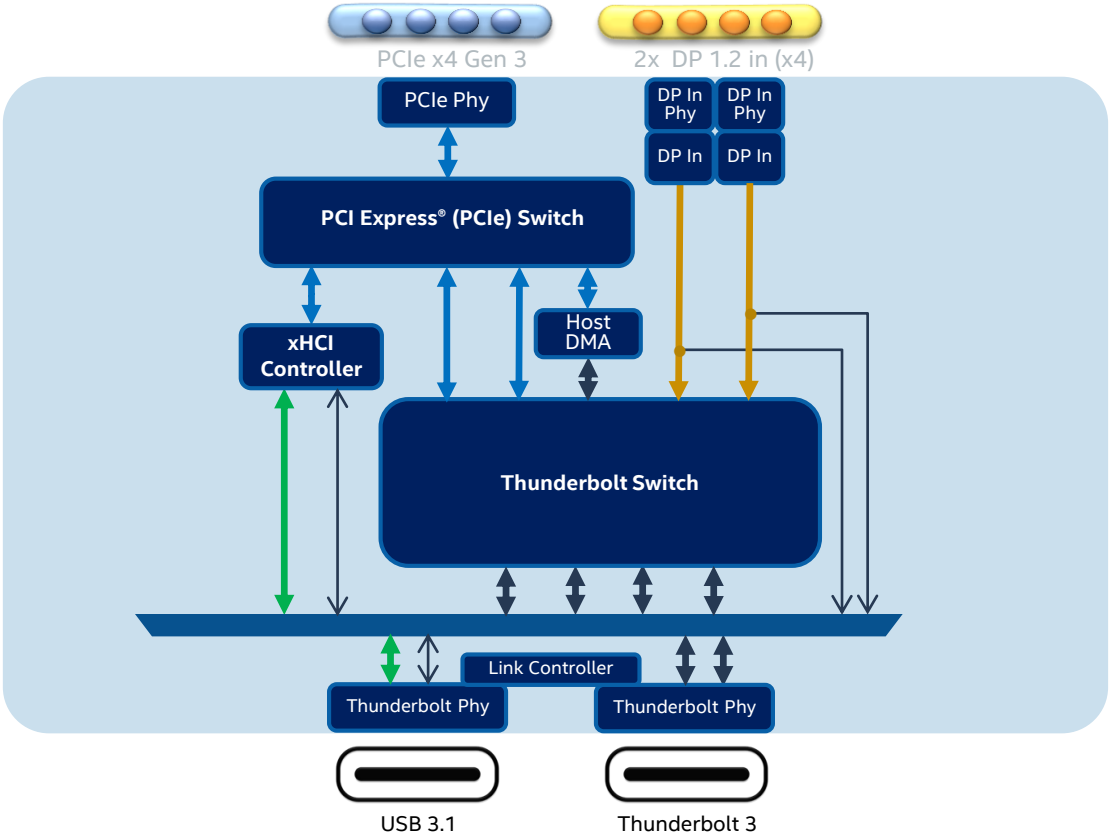


Active Block

Inactive Block

Active Path

Inactive Path

Each Thunderbolt port is configured independently

# Thunderbolt™ 3 DisplayPort* Host Mode

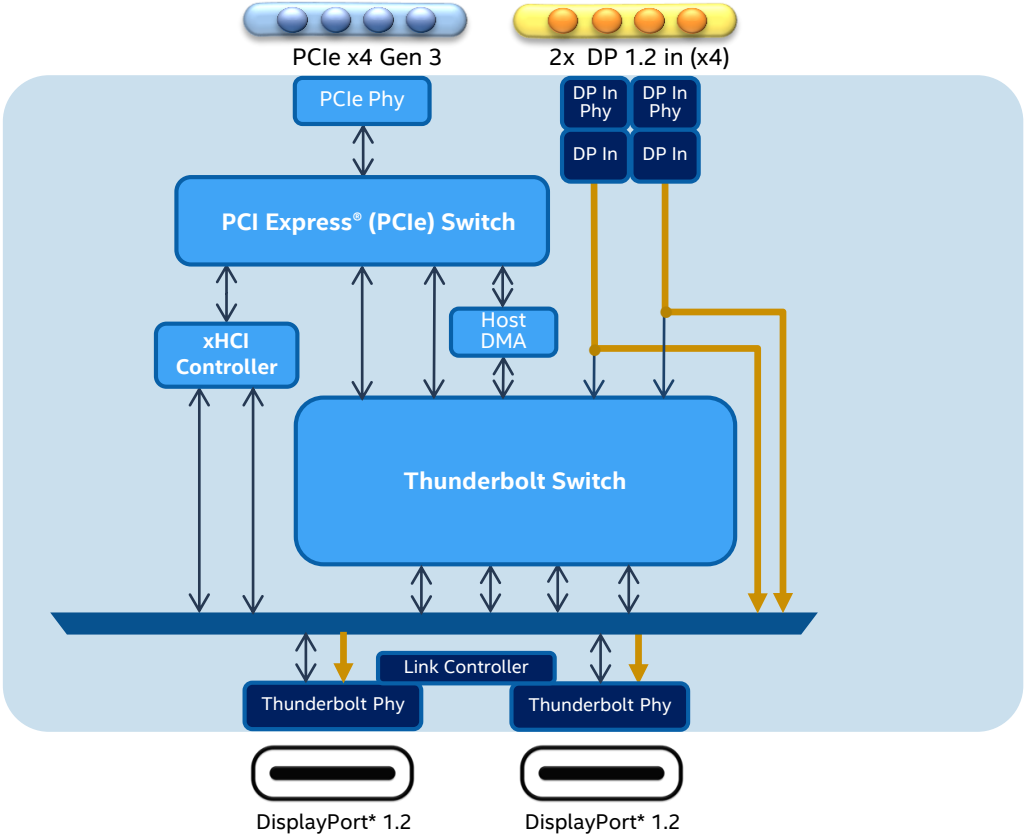


Active Block

Inactive Block

Active Path

Inactive Path

# More Pixels


**Large** displays with **amazing** detail

- Twice the video bandwidth of any other cable
- **Single-cable** connection for **two 4K 60Hz** or a **5K 60Hz** display
- 2 streams (eight lanes) of DisplayPort* 1.2

# More Power

**100W System Charging**

For single-cable docking

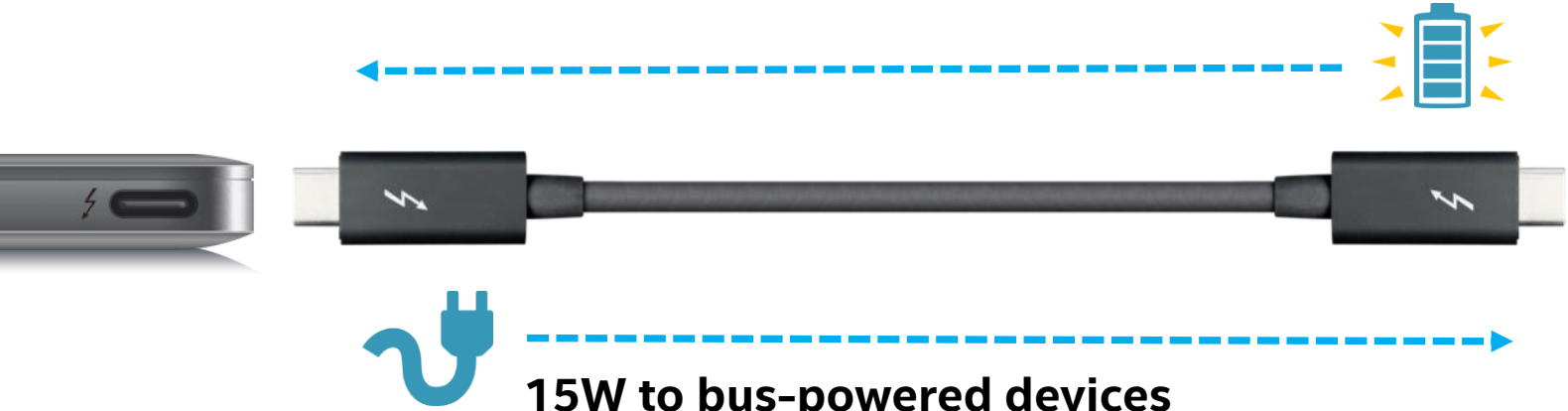

**15W to bus-powered devices**

- Higher speed and capacity storage
- Portable displays
- High-performance adapters

# Thunderbolt™ Daisy-Chain

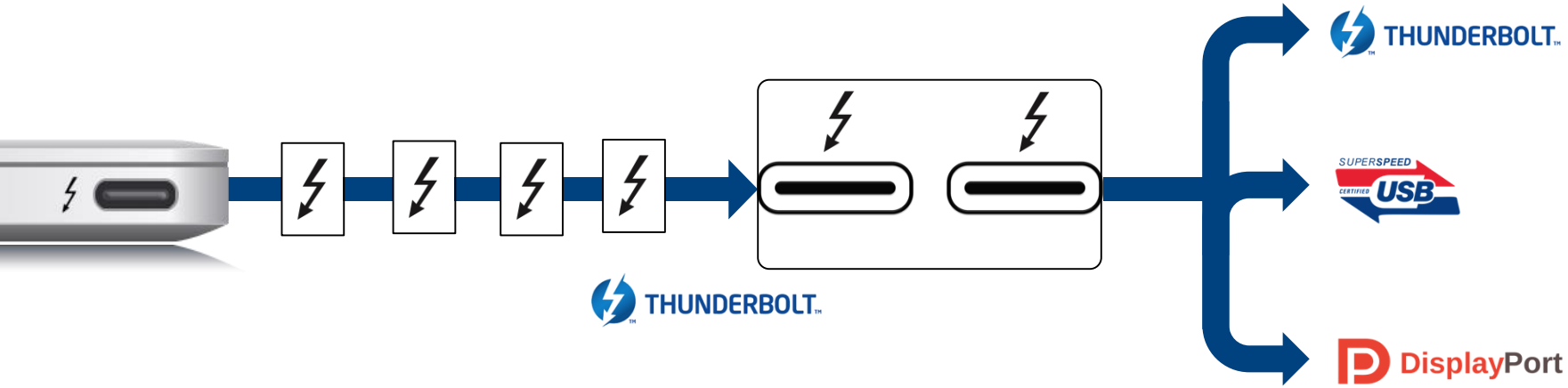


**Daisy-chain** up to six Thunderbolt devices

**Open Thunderbolt port** operates the **same as computer port** and supports Thunderbolt, USB, or DisplayPort* devices

# Agenda

- USB-C Introduction
- Thunderbolt™ 3 Technology Overview
- Key User Experiences
- Thunderbolt Device Development
- USB-C Alternate Mode and Power Delivery
- Summary

# Key User Experiences

4K Video

Single-cable Docking

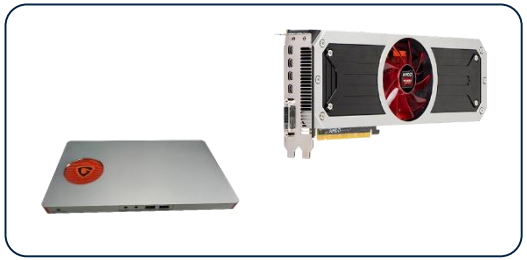

External Graphics

Thunderbolt™ Networking

# Thunderbolt™ 3 Delivers Best Docking over USB-C

Bandwidth for more and faster IO

←100W PC Charging



## Single-Cable Docking

- 40Gbps Data + 4K Video + 100W PC Charging
- Only way to get 4K + data from one USB-C connection
- Two uncompressed 4K displays

# Thunderbolt™ 3 External Graphics

External graphics solution that supports hot plug & surprise removal of cable on dedicated PC-device

- External graphics can connect to external monitor, or be routed back to notebook screen


## Graphics Dock

*USB 3.0, GbE, Discrete Graphics with HDMI*, VGA*

## Standalone Graphics

*150-200W discrete graphics card for premium gaming*

All information related to future Intel products and plans is preliminary and subject to change at any time, without notice.

# Thunderbolt™ Networking with Thunderbolt 3

- Peer-to-Peer communication between computers
- Bridging or routing between multiple computers
- Behaves as if systems were connected with Ethernet
  - Uses existing OS network and sharing infrastructure
    - File, print, share internet connection, etc…
- Connect Mac*/PC/Linux* to Mac/PC/Linux

Only PC I/O to offer 20Gbps network data transfer speed

# Agenda

- USB-C Introduction
- Thunderbolt™ 3 Technology Overview
- Key User Experiences
- Thunderbolt Device Development
- USB-C Alternate Mode and Power Delivery
- Summary

# Thunderbolt™ 3 Peripheral Device Targets

## Device Categories

- **Docks**
- **Displays**
- **Storage**
- **Cables**
  - Thunderbolt™ 20Gbps and 40Gbps
  - USB-C to USB Type-B, Type-A and Micro-B, DisplayPort*, mDP, HDMI*
- **Adapters**
  - Thunderbolt 3 to legacy Thunderbolt (based on mDP)
  - Dual video and more
- **Audio/Video**
- **NAS**

# Thunderbolt™ 3 Dock – Connect to PC with One Cable

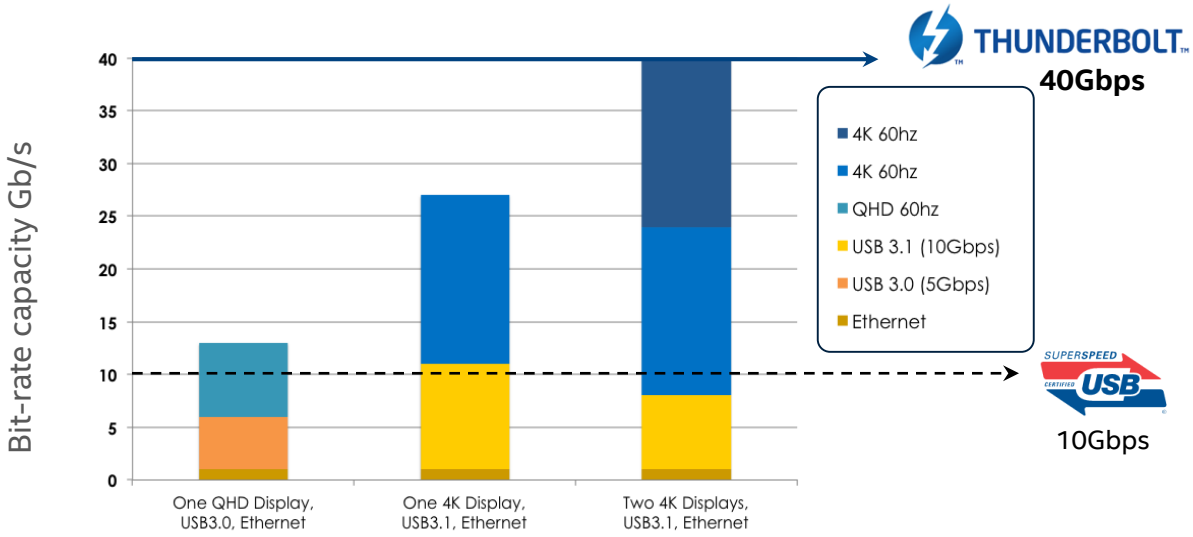


Thunderbolt 3
Connection to PC

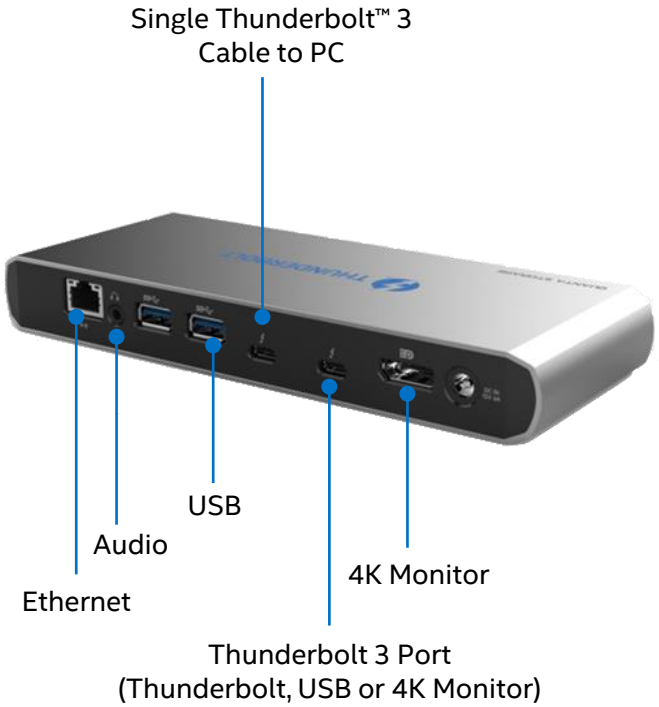


Showing max bandwidth for each protocol listed - many other protocols are possible depending on dock configuration (eSATA*, card slots, Firewire*, HDMI*, WiGig*)

Source of performance measurement: Intel testing in Intel lab. Other developers may receive different results. Diagrams for marketing purposes only, see IBL for specific details. All products, designs, computer systems, dates and figures specified are preliminary based on current expectations, and are subject to change without notice.

# Full x4 PCI Express® Gen 3 Bandwidth to Device

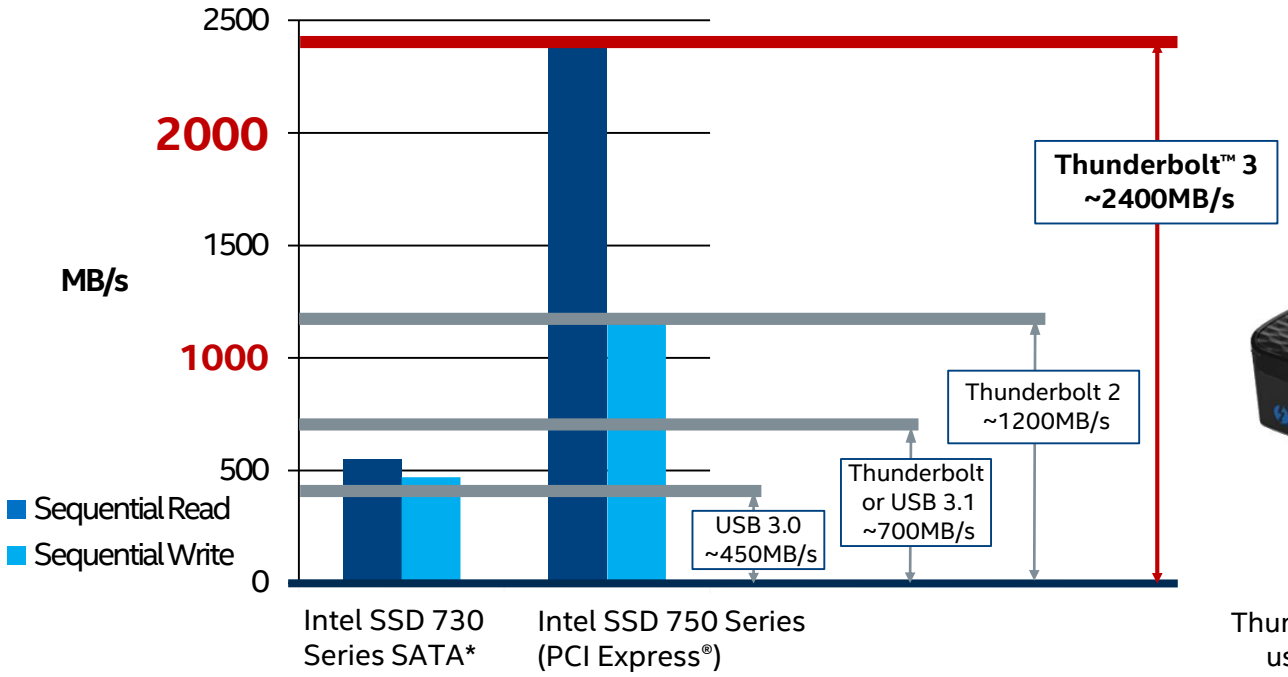


Thunderbolt 3 External Storage Device using Intel® SSD 750 Series (NVM Express™)

Source of performance measurement: Intel testing in Intel lab. Other developers may receive different results. Diagrams for marketing purposes only, see IBL for specific details. All products, designs, computer systems, dates and figures specified are preliminary based on current expectations, and are subject to change without notice.

# Thunderbolt™ 3 Base Design for Devices

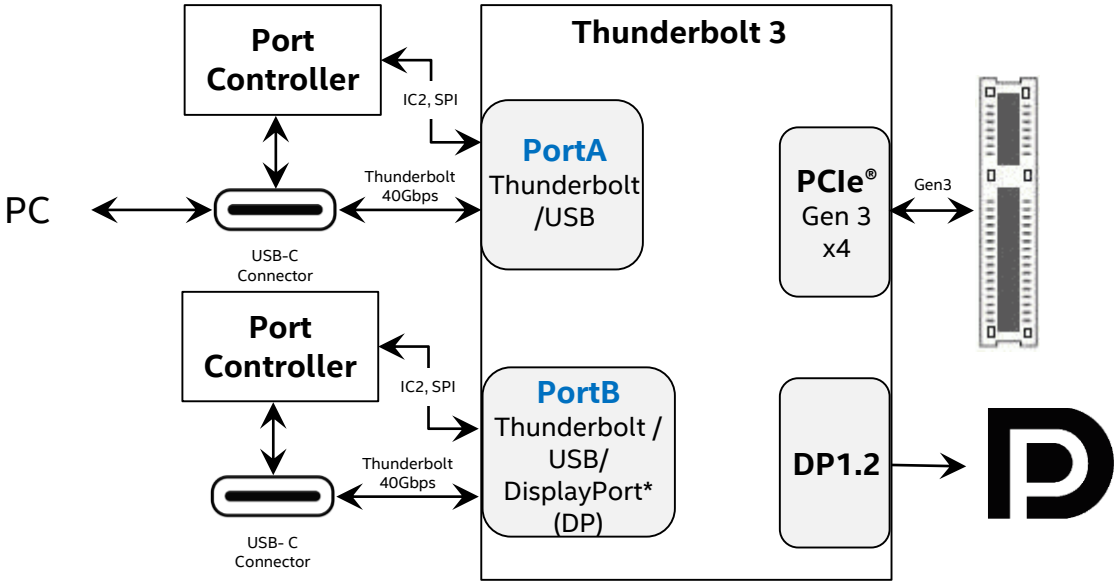


Diagrams for marketing purposes only, see IBL for specific details. All products, designs, computer systems, dates and figures specified are preliminary based on current expectations, and are subject to change without notice.

# Thunderbolt™ Cables

- Passive lower cost cables will support Thunderbolt™ at 20Gb/s
  - Low cost cables will be adequate for many Thunderbolt devices
  - Lengths up to 2.0m
- Thunderbolt active cables will support Thunderbolt at 40Gb/s
  - Needed for high-performance docking with 4K displays and storage, and enthusiast-level external graphics
  - Lengths up to 2.0m
- Optical Cables will support Thunderbolt at 40Gb/s
  - Targeted for 2016 with lengths up to 60m

# How to Become a Thunderbolt™ Developer

- Visit

  thunderbolttechnology.net

- Submit Application Form

  thunderbolttechnology.net/developers

# Agenda

- USB-C Introduction
- Thunderbolt™ 3 Technology Overview
- Key User Experiences
- Thunderbolt Device Development
- USB-C Alternate Mode and Power Delivery
- Summary

# USB Power Delivery Contract Example

**Scope Capture w/ TPS65982 Firmware**
(One DFP as a Dock & One UFP as a Notebook)

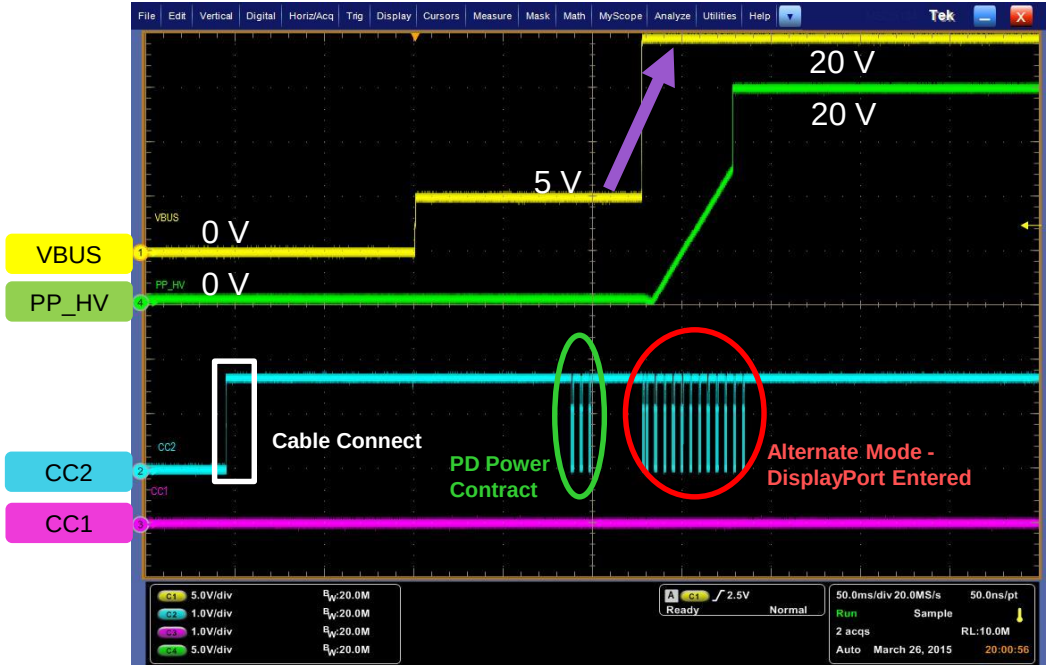


- DFP & UFP establish a PD power contract
- **DFP send source capabilities and UFP will send back sink capabilities**
- **PD contract established VBUS changes to 20V**
- **DFP enters Discovery Mode**

# TPS65982 Handles HV Charging

## System Concerns – Charging from VBUS

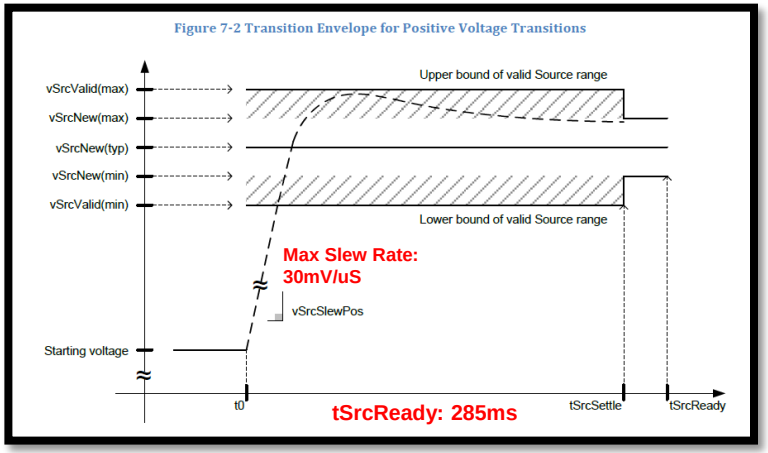


- System power must meet the positive voltage transition spec
  - Dip is allow at the beginning of the transition
    - Must not drop vSrcValid (min) USB 2.0/3.1
  - Must be monotonic when transitioning

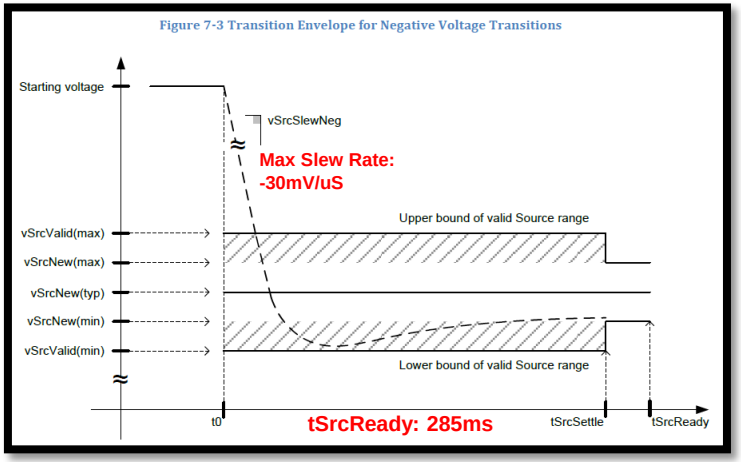


- System power must meet the negative voltage transition spec
  - Dip is allow at the end of the transition
    - Must not drop vSrcValid (min) USB 2.0/3.1
  - Must be monotonic when transitioning
- Pull down circuit may be implemented for negative slew rate

# TPS65982 | USB-C Port Power Switch with USB-PD Controller & HS Mux

Available Now

## Features

- Supports all USB-C High Current Modes
  - Integrated Port Power Switches up to 20V @ 3A
  - Supports bi-directional external power NMOS FETs
- Fully compliant USB PD Baseband modem per USB PD2.x
  - BMC encoder/decoder
  - Physical Layer with CRC
  - Policy and Policy Engine
- Performs all CC pin functions
  - Cable Detection and Cable Orientation
- Integrated HS Mux
  - CC/2, SBU1/2, USB TP/TN, USBBP/BN
  - Support for Guest Port Protocols
    - DisplayPort*, Thunderbolt™
- Flexible system interfaces
  - I2C Slave/Master, SPI, Simple connection to HD3SS460 SS Mux for Display Port/USB3.0
- Easy to use 6 x 6 mm uBGA ZQZ 96pin, 0.5mm pitch

## Applications

- Notebook / Desktop Computers
- Dock / Camera / Storage / Tablet / TV/ Monitor
- Power Management System

## Benefits

- Fully Integrated USB-C and PD Solution
  - No additional discrete components needed for full CC Function
  - No additional components needed for Power Paths up to 20V @ 3A
- Compliant to the USB-C 1.x and USB PD 2.x Specifications
- Configurable as either a Downward Facing Port, Upward Facing Port or Dual Role Port
- Integrated USB Endpoint
- Industry's smallest solution size

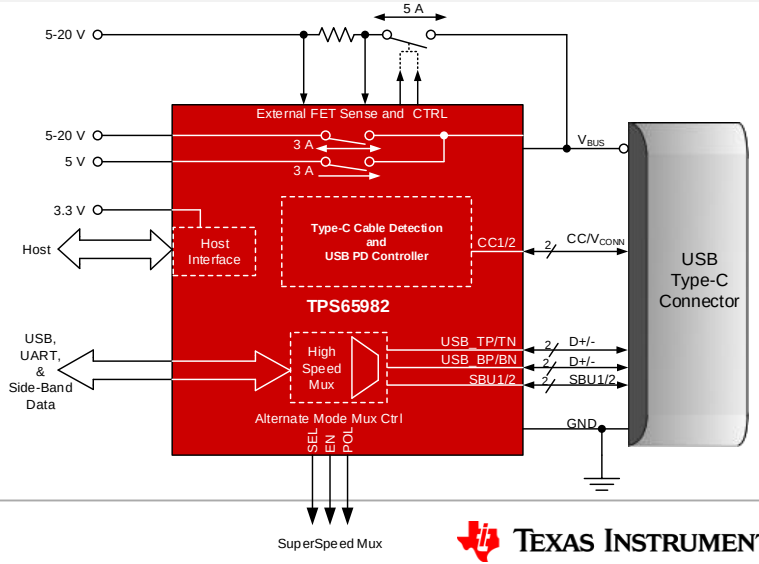

# Agenda

- USB-C Introduction
- Thunderbolt™ 3 Technology Overview
- Key User Experiences
- Thunderbolt Device Development
- USB-C Alternate Mode and Power Delivery
- Summary

# Summary

- Thunderbolt™ 3 is a premium I/O controller that supports 3rd Gen Thunderbolt, USB 3.1 and DisplayPort* 1.2
- Thunderbolt 3 will adopt the USB-C connector as the Thunderbolt connector for future generation designs
  - Small form factor, standard, and high volume
  - One connector for charging, power delivery, USB, video, and Thunderbolt
- Key user experiences are 4K video, single wire docking, Thunderbolt networking and external graphics
- Texas Instruments provides a complete power delivery solution

# Additional Sources of Information

- A PDF of this presentation is available from our Technical Session Catalog: www.intel.com/idfsessionsSF. This URL is also printed on the top of Session Agenda Pages in the Pocket Guide.
- Come and see our demos in the Intel Computing Innovation Exhibit located on the 2nd floor concourse
- Additional info in the Thunderbolt™ Community – Booth #'s 931-942
- More web based info: www.thunderbolttechnology.net
- Learn More About Thunderbolt: http://learn.thunderbolttechnology.com/

# Legal Notices and Disclaimers

# Risk Factors

The above statements and any others in this document that refer to plans and expectations for the second quarter, the year and the future are forward-looking statements that involve a number of risks and uncertainties. Words such as "anticipates," "expects," "intends," "plans," "believes," "seeks," "estimates," "may," "will," "should" and their variations identify forward-looking statements. Statements that refer to or are based on projections, uncertain events or assumptions also identify forward-looking statements. Many factors could affect Intel's actual results, and variances from Intel's current expectations regarding such factors could cause actual results to differ materially from those expressed in these forward-looking statements. Intel presently considers the following to be important factors that could cause actual results to differ materially from the company's expectations. Demand for Intel's products is highly variable and could differ from expectations due to factors including changes in business and economic conditions; consumer confidence or income levels; the introduction, availability and market acceptance of Intel's products, products used together with Intel products and competitors' products; competitive and pricing pressures, including actions taken by competitors; supply constraints and other disruptions affecting customers; changes in customer order patterns including order cancellations; and changes in the level of inventory at customers. Intel's gross margin percentage could vary significantly from expectations based on capacity utilization; variations in inventory valuation, including variations related to the timing of qualifying products for sale; changes in revenue levels; segment product mix; the timing and execution of the manufacturing ramp and associated costs; excess or obsolete inventory; changes in unit costs; defects or disruptions in the supply of materials or resources; and product manufacturing quality/yields. Variations in gross margin may also be caused by the timing of Intel product introductions and related expenses, including marketing expenses, and Intel's ability to respond quickly to technological developments and to introduce new products or incorporate new features into existing products, which may result in restructuring and asset impairment charges. Intel's results could be affected by adverse economic, social, political and physical/infrastructure conditions in countries where Intel, its customers or its suppliers operate, including military conflict and other security risks, natural disasters, infrastructure disruptions, health concerns and fluctuations in currency exchange rates. Results may also be affected by the formal or informal imposition by countries of new or revised export and/or import and doing-business regulations, which could be changed without prior notice. Intel operates in highly competitive industries and its operations have high costs that are either fixed or difficult to reduce in the short term. The amount, timing and execution of Intel's stock repurchase program could be affected by changes in Intel's priorities for the use of cash, such as operational spending, capital spending, acquisitions, and as a result of changes to Intel's cash flows or changes in tax laws. Product defects or errata (deviations from published specifications) may adversely impact our expenses, revenues and reputation. Intel's results could be affected by litigation or regulatory matters involving intellectual property, stockholder, consumer, antitrust, disclosure and other issues. An unfavorable ruling could include monetary damages or an injunction prohibiting Intel from manufacturing or selling one or more products, precluding particular business practices, impacting Intel's ability to design its products, or requiring other remedies such as compulsory licensing of intellectual property. Intel's results may be affected by the timing of closing of acquisitions, divestitures and other significant transactions. A detailed discussion of these and other factors that could affect Intel's results is included in Intel's SEC filings, including the company's most recent reports on Form 10-Q, Form 10-K and earnings release.

Rev. 4/14/15

# Backup

# New Thunderbolt™ 3 Branding

| Name | Logo | Icon | Port Placement |
|---|---|---|---|
| **Thunderbolt™ 3** | THUNDERBOLT™ | |  |
| Generation Rev | No change | | |

# USB-C & Thunderbolt™ Lane Bonding

- USB-C connectors provide 4 high-speed differential signal paths clockable up to 20 Gbps each
- Thunderbolt™ 3 controllers bond two lanes in each direction at 10 Gbps or 20 Gbps to create either two 20 Gbps or 40 Gbps links, enabling high-speed data transfers in each direction simultaneously